US00D381387S

# United States Patent [19]

Canaday et al.

[11] Patent Number: Des. 381,387

[45] Date of Patent: **Jul. 22, 1997

[54] **SHOULDER-LAUNCHED, MULTIPLE-PURPOSE ASSAULT WEAPON**

[75] Inventors: **Michael M. Canaday**, King George; **Fred W. Watson, Jr.**, Montross, both of Va.

[73] Assignee: **The United States of America as represented by the Secretary of the Navy**, Washington, D.C.

[**] Term: **14 Years**

[21] Appl. No.: **42,682**

[22] Filed: **Aug. 14, 1995**

[51] **LOC (6) Cl.** ..... **22-01**

[52] **U.S. Cl.** ..... **D22/100**; D22/199

[58] **Field of Search** ..... D22/100, 101, D22/112, 199; D21/145, 146, 147; 42/22, 71.01; 89/1.7, 1.701, 1.702, 1.703, 1.704, 1.705, 1.816, 19, 127

[56] **References Cited**

U.S. PATENT DOCUMENTS

| | | | |
|---|---|---|---|
| D. 204,469 | 4/1966 | Ryan | D21/146 |
| D. 348,700 | 7/1994 | Lin | D21/146 |
| 2,466,714 | 4/1949 | Kroeger et al. . | |
| 2,970,519 | 2/1961 | Musser et al. | D21/146 |
| 3,302,522 | 2/1967 | Laureys | 89/1.816 X |
| 3,389,637 | 6/1968 | Beier et al. . | |
| 3,490,330 | 1/1970 | Walther . | |
| 3,494,249 | 2/1970 | Choate . | |
| 4,432,269 | 2/1984 | Castagner et al. | 89/1.816 |
| 4,554,860 | 11/1985 | Johansson et al. | 89/1.7 |
| 4,895,061 | 1/1990 | Baricos et al. . | |

*Primary Examiner*—Louis S. Zarfas
*Assistant Examiner*—Monica A. Weingart
*Attorney, Agent, or Firm*—James B. Bechtel, Esq.

[57] **CLAIM**

The ornamental design for a shoulder-launched, mulitple-purpose assault weapon, as shown and described.

**DESCRIPTION**

FIG. **1** is perspective view of the shoulder-launched, multiple-purpose assault weapon;
FIG. **2** is a frontward looking view of the present invention;
FIG. **3** is a rearward looking view of the present invention;
FIG. **4** is a top view of the present invention;
FIG. **5** is a right side view of the present invention;
FIG. **6** is a left side view of the present invention; and,
FIG. **7** is a bottom view of the present invention.

**1 Claim, 3 Drawing Sheets**

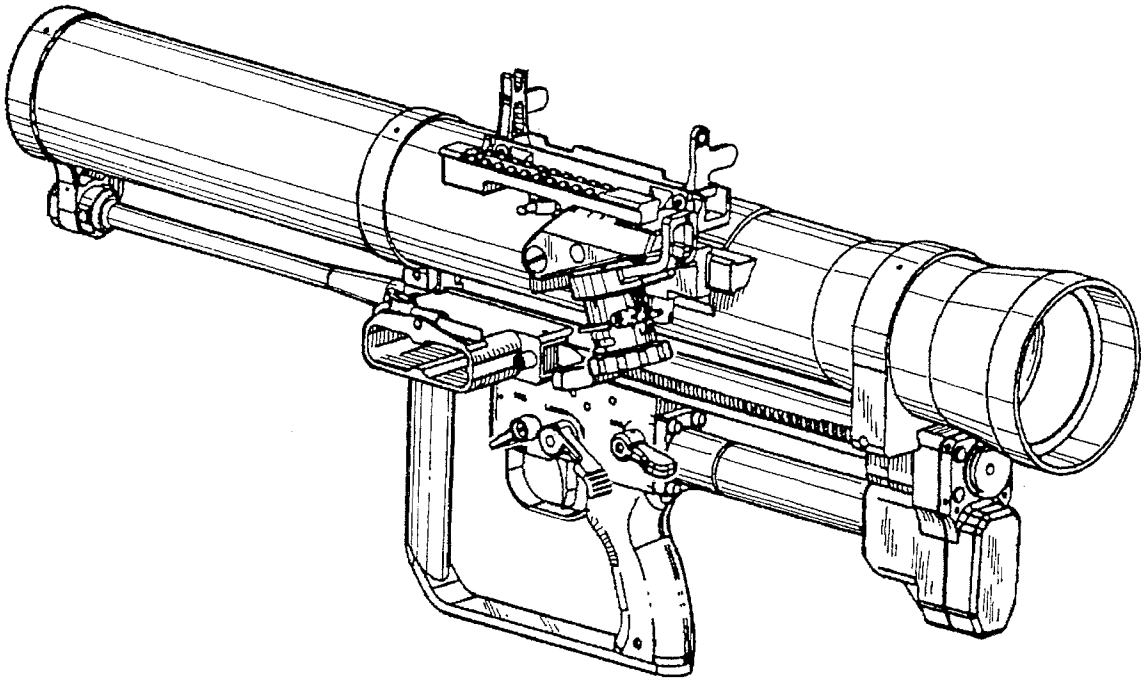

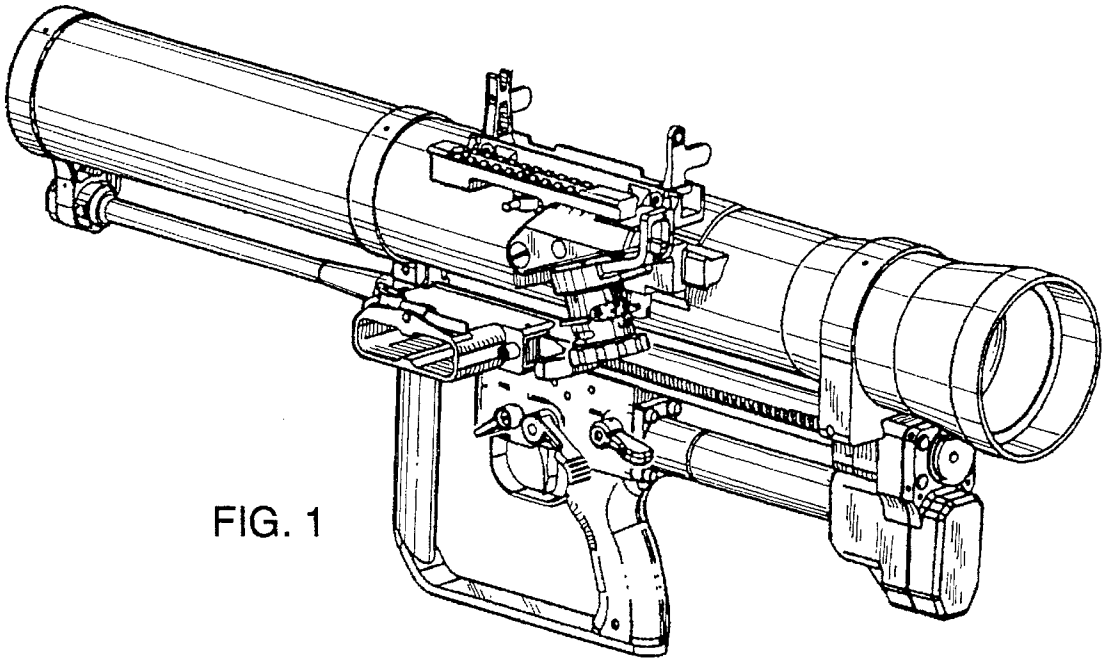

FIG. 1

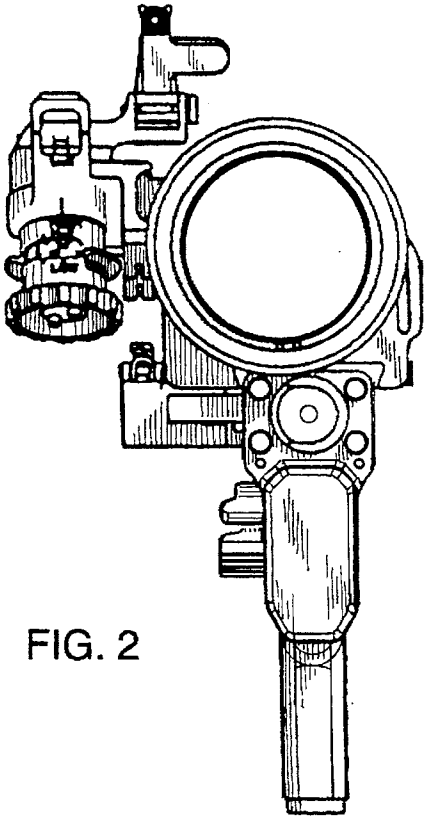

FIG. 2

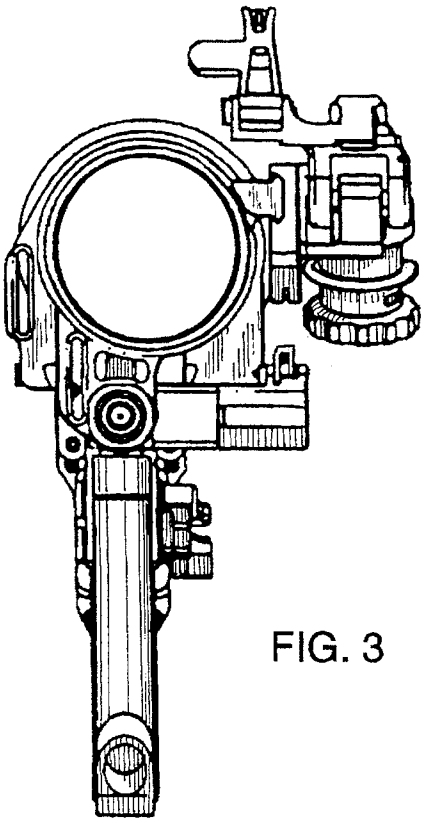

FIG. 3

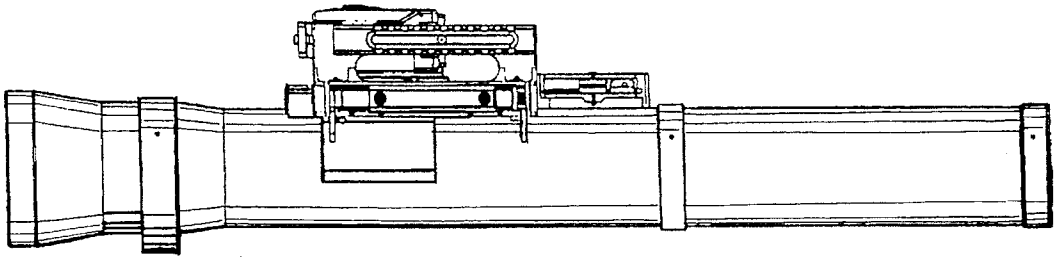

FIG. 4

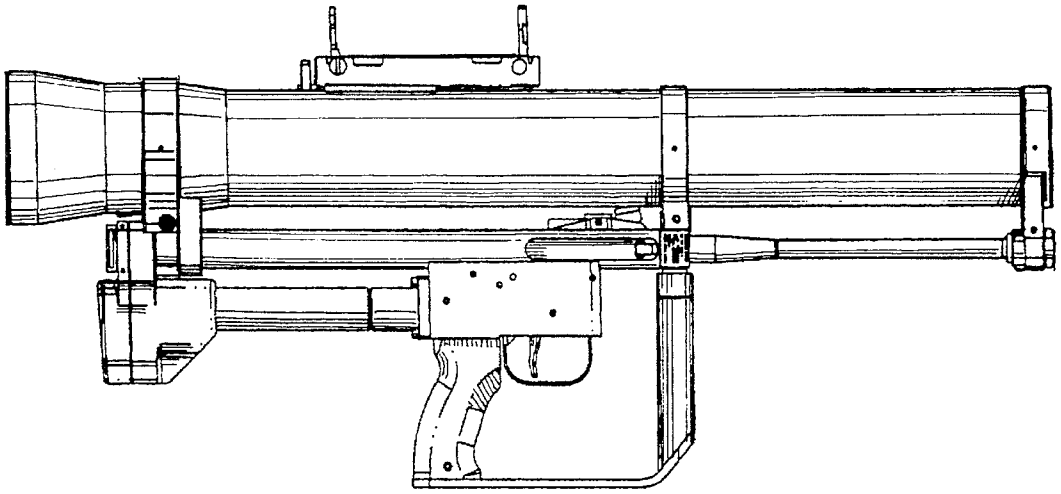

FIG. 5

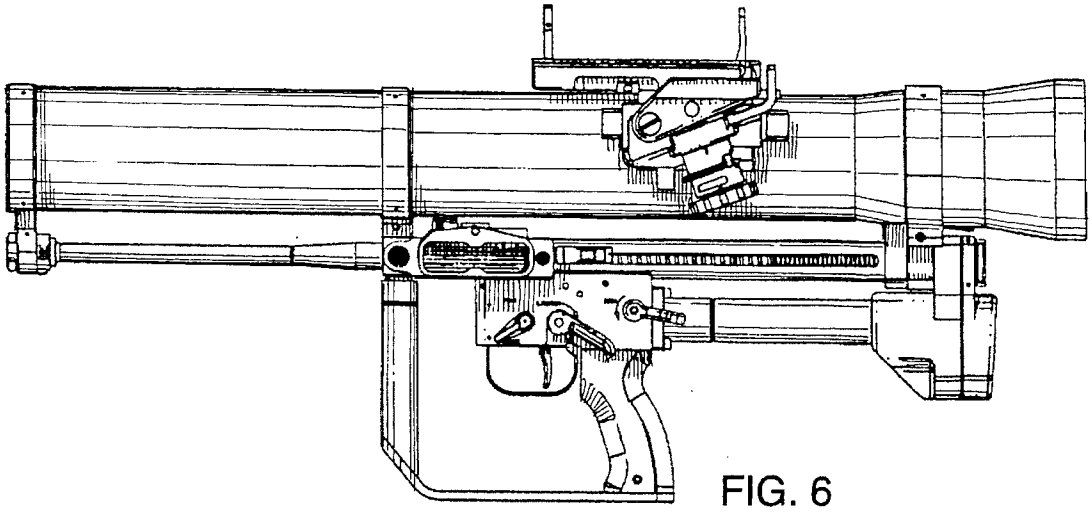

FIG. 6

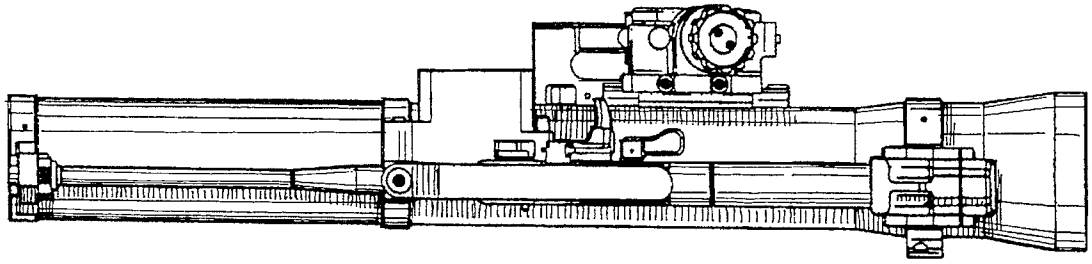

FIG. 7